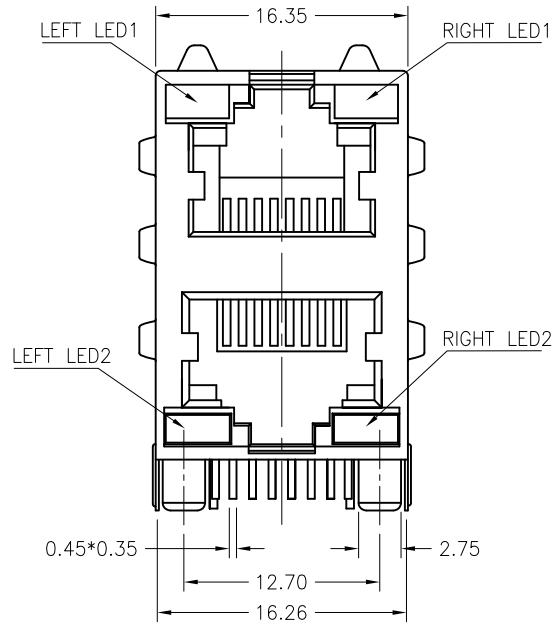

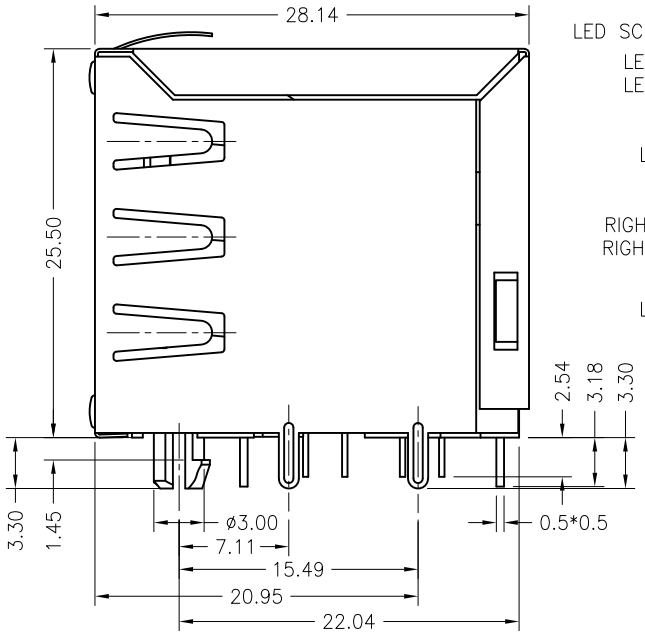

LED SCHEMATIC:

LEFT LED1:
LEFT LED2:

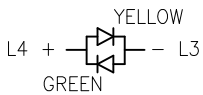

RIGHT LED1:
RIGHT LED2:

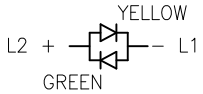

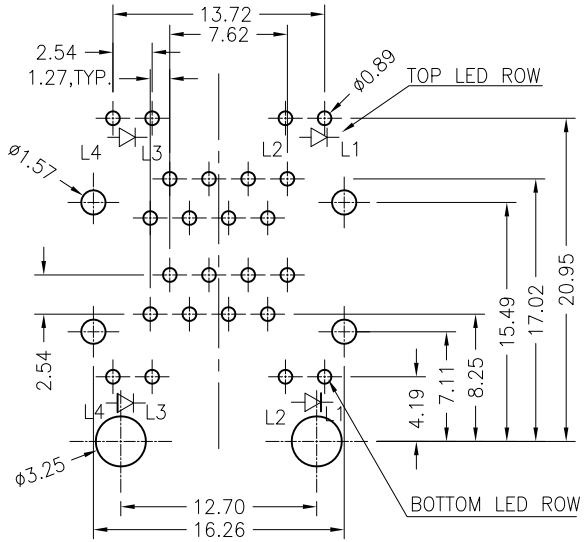

NOTES:
1.MATERIAL:
HOUSING:HIGH TEMPERATURE THERMO PLASTIC (UL94V-0)
CONTACT:PHOSPHOR BRONZE
SHELL:BRASS,T=0.25mm
2.FINISHED:
CONTACT:50u"MIN. NICKEL UNDERPLATING ALL AREA,
100u"MIN. TIN ON SOLDERTAILS,
SELECT GOLD PLATING ON CONTACT AREA.
SHELL:30u"MIN. NICKEL PRE-PLATING ALL AREA
3.JACK CAVITY CONFORMS TO FCC RULES AND
REGULATIONS PART 68.500 (D) (2)

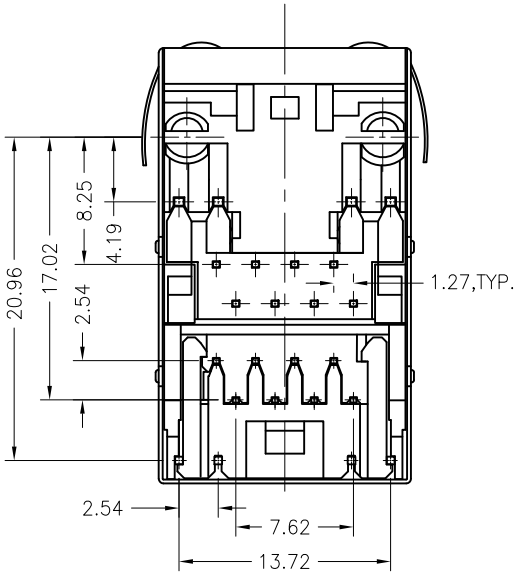

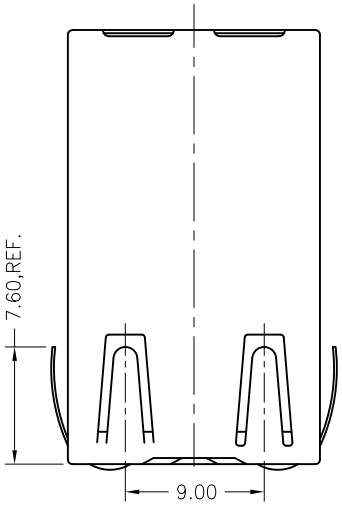

TOP VIEW

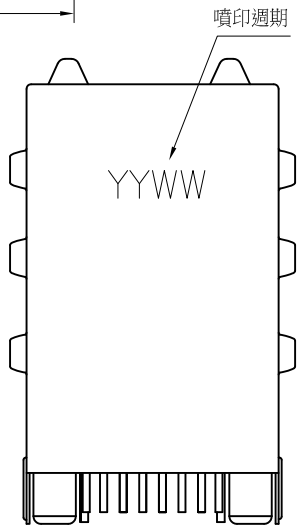

BACK VIEW

P/N RULE:

JM1-C A 1 8-2 1 0 Y

SHELL CODE
A: W/ALL SPRING TOP 2 SPRING, W/O LOGO

1:HSG PBT

LED CODE
LEFT LED1: YELLOW/GREEN
LEFT LED2: YELLOW/GREEN
RIGHT LED1: YELLOW/GREEN
RIGHT LED2: YELLOW/GREEN

PLATING CODE
2-GOLD PLATED 3u"

DIM CODE
Contact PIN DIM A :2.54
LED PIN DIM B :3.18

0: LED墓碑形

Y: 一體式外殼

REV.	ECN. NO.	DRAWN	DATE
A	NEW	Xingjian	03/13/2015

ECONN Technology
ECONN CORPORATION

HSF Compliant

ⓧ:QUALITY CONTROL ITEM	
APPROVED	
CHECKED	
DRAWN	

GENERAL TOLERANCE
.X± 0.38 X.°± 2°
.XX± 0.25 .X°± 1°
.XXX± 0.13

PART NO.: JM1-CA18-210Y

TITLE: RJ45 CONNECTOR JM 2*1 PORT W/LED, 8P8C, Shielded, Thru-Hole

UNIT: mm | SCALE: 1:1 | SHEET: 1/1 | REV.: A

SIZE: A4

說明: △ :備註 ◇ :版本變更 Ⓝ :尺寸序號 ■ :重點尺寸 ▼ :CPK尺寸

DOCUMENT NO. : ZER0013/A.2